Changes for the Better

SERVICE PARTS LIST FOR MITSUBISHI ELECTRIC PACKAGED AIR-CONDITIONERS

Series : PEA-RP•GAQ.TH-AF

Oct. 2010

BWE10140

INDEX
PEA-RP200GAQ.TH-AF PEA-RP250GAQ.TH-AF PEA-RP400GAQ.TH-AF PEA-RP500GAQ.TH-AF

MITSUBISHI ELECTRIC

EXTERNAL PARTS (1)

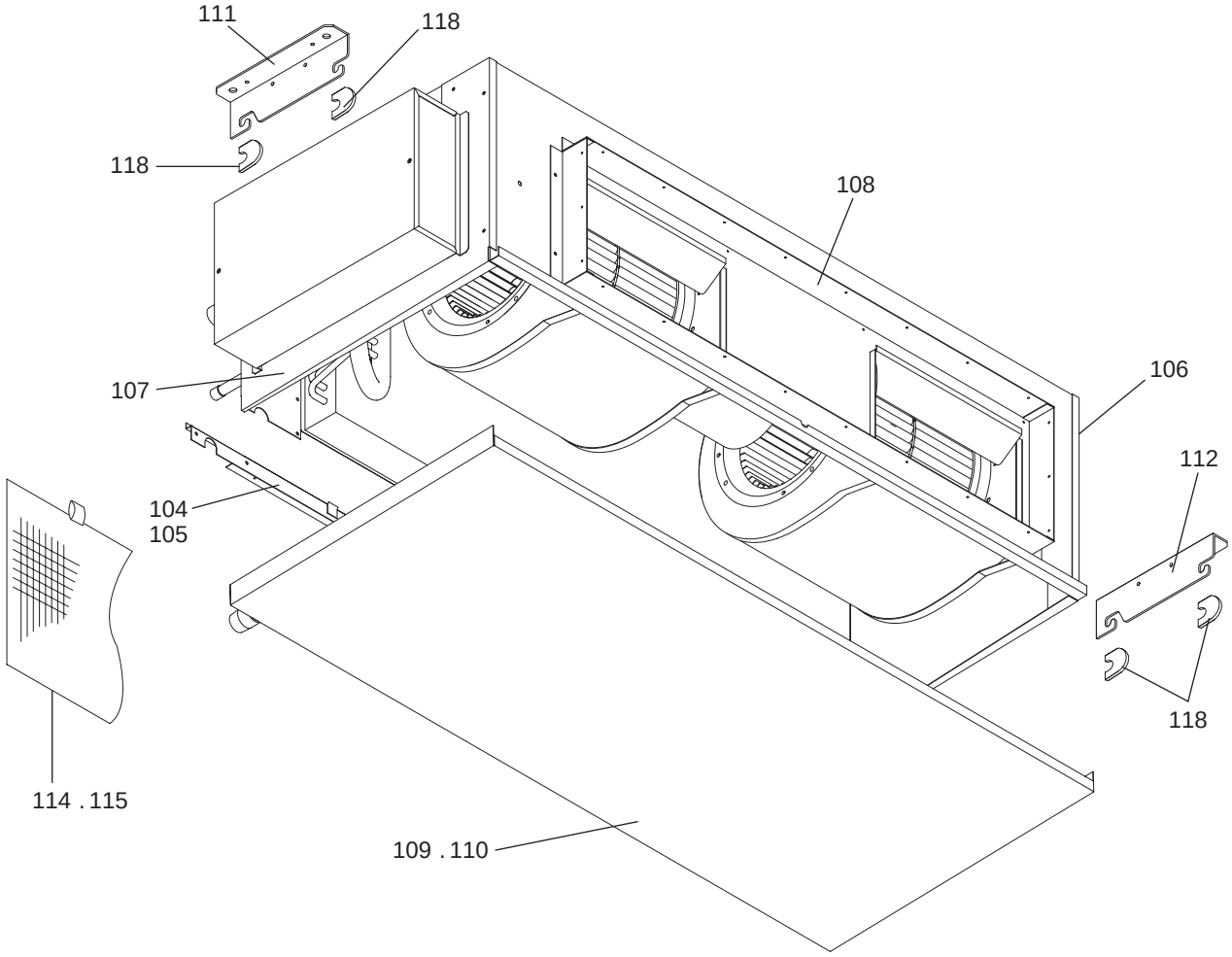

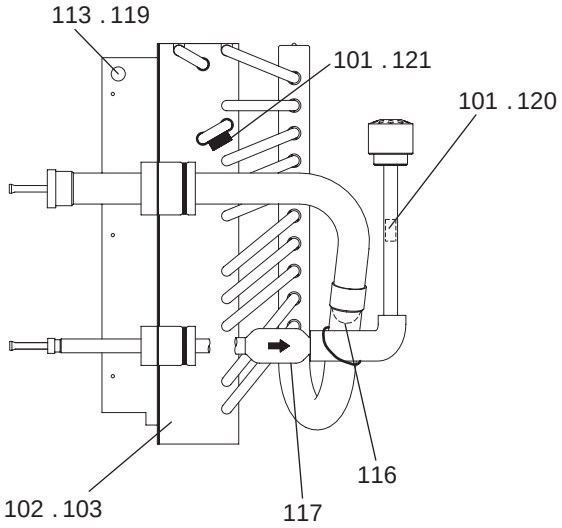

EXTERNAL PARTS (1)

No.	Part No.	G : RoHS Apply Only W : RoHS Apply by Running Change	Part Name	Spec.	PEA-RP200GAQ.TH-AF	PEA-RP250GAQ.TH-AF					Dwg. No.	Notes for the models	Revision info.
101	BG38P815H01	G	TH.SPRING		2	2					BG38P815H01		
102	E17 353 620	G	HEAT EXCHANGER	<200>	1						KP00B469B07		
103	E17 354 620	G	HEAT EXCHANGER	<250>		1					KP00B469B08		
104	KP00C590G04	G	ATTACHMENT	F.RAIL	1						KP00C590G04		
105	KP00C590G05	G	ATTACHMENT	F.RAIL		1					KP00C590G05		
106	E17 328 085	G	PANEL (SR) ASSY		1	1					KP00C593G01		
107	E17 328 086	G	PANEL (SL) ASSY		1	1					KP00C594G01		
108	E17 330 709	G	FLANGE ASSY	OUTLET	1	1					KP00C597G07		
109	E17 331 700	G	DRAIN PAN ASSY			1					KP00C599G02		
110	E17 330 700	G	DRAIN PAN ASSY		1						KP00C928G03		
111	E17 328 809	G	LEG		1	1					KP02B501G07		
112	E17 328 808	G	LEG		1	1					KP02B501G08		
113	E17 319 013	G	BUSH	SRB-R-2	1	1					KB32K138H01		
114	E17 330 100	G	FILTER		1						KP35G359H02		
115	E17 331 100	G	FILTER			1					KP35G359H03		
116	E17 343 933	G	STRAINER		1	1					KP53F131H02		
117	E17 355 933	G	STRAINER	1/2	1	1					KP53F479H01		
118	E17 328 097	G	SPECIAL WASHER		4	4					KP02F652G01		
119	E17 136 308	G	THERMISTOR-S	1350XAP TH1	1	1					RG71B018H12		
120	E17 240 307	G	THERMISTOR-H	1350 TH2	1	1					RG71J486H12		
121	E17 343 309	G	THERMISTOR-2	1350 TH5	1	1					RG71J488H12		

EXTERNAL PARTS (2)

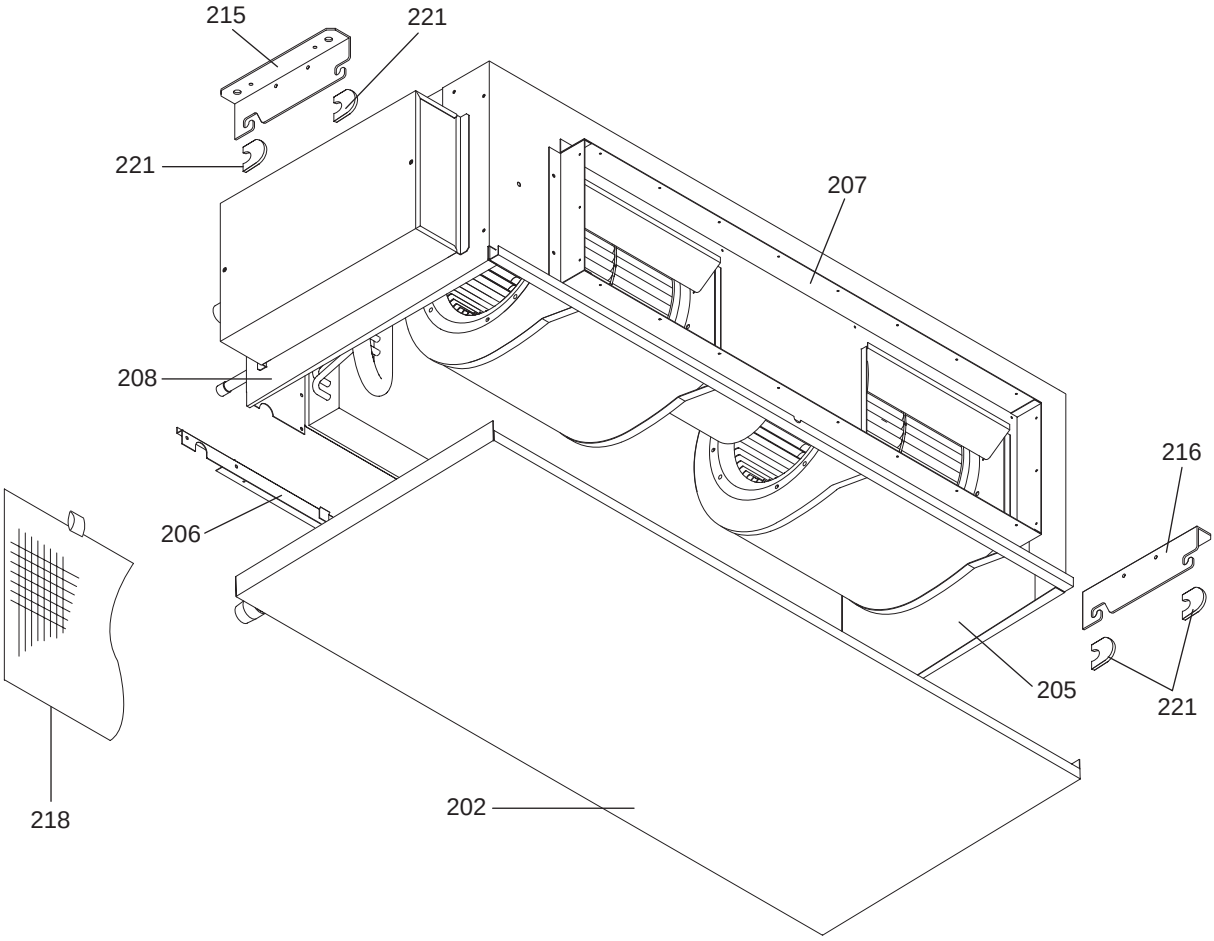

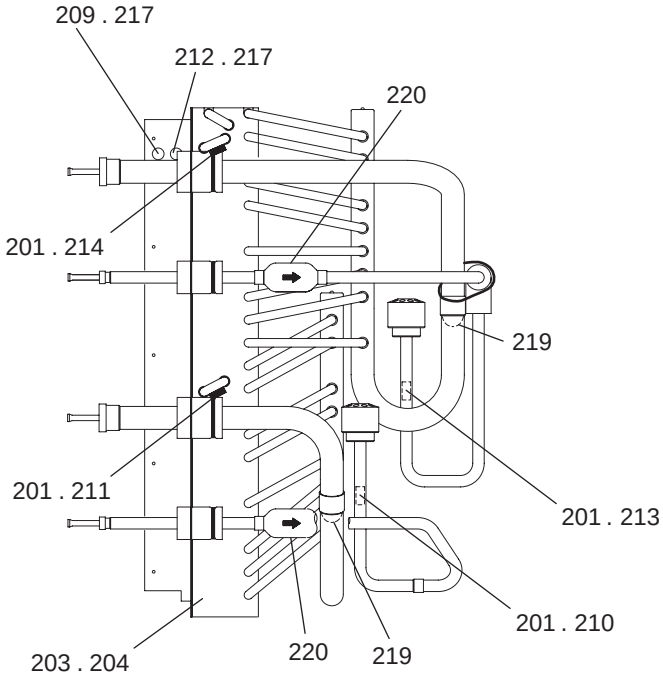

EXTERNAL PARTS (2)

No.	Part No.	G : RoHS Apply Only W : RoHS Apply by Running Change	Part Name	Spec.	PEA-RP400GAQ.TH-AF	PEA-RP500GAQ.TH-AF					Dwg. No.	Notes for the models	Revision info.
201	BG38P815H01	G	TH.SPRING		4	4					BG38P815H01		
202	E17 333 700	G	DRAIN PAN ASSY		1	1					KP00B275G01		
203	E17 355 620	G	HEAT EXCHANGER	<400>	1						KP00B527B07		
204	E17 356 620	G	HEAT EXCHANGER	<500>		1					KP00B527B08		
205	E17 333 085	G	PANEL (SR) ASSY		1	1					KP00C631G01		
206	KP00C633G03	G	ATTACHMENT	F.RAIL	1	1					KP00C633G03		
207	E17 333 709	G	FLANGE ASSY	OUTLET	1	1					KP00C636G03		
208	E17 333 086	G	PANEL (SL) ASSY		1	1					KP00C639G01		
209	E17 333 308	G	THERMISTOR	ROOM-NO1 TH1-1	1	1					KP00F184G07		
210	E17 333 307	G	THERMISTOR	LIQ-NO1 TH2-1	1	1					KP00F184G08		
211	E17 333 309	G	THERMISTOR	COND/EVA1 TH5-1	1	1					KP00F184G09		
212	E17 334 308	G	THERMISTOR	ROOM-NO2 TH1-2	1	1					KP00F184G10		
213	E17 334 307	G	THERMISTOR	LIQ-NO2 TH2-2	1	1					KP00F184G11		
214	E17 334 309	G	THERMISTOR	COND/EVA2 TH5-2	1	1					KP00F184G12		
215	E17 333 809	G	LEG		1	1					KP02B502G07		
216	E17 333 808	G	LEG		1	1					KP02B502G08		
217	E17 319 013	G	BUSH	SRB-R-2	2	2					KB32K138H01		
218	E17 333 100	G	FILTER		1	1					KP35G360H01		
219	E17 343 933	G	STRAINER		2	2					KP53F131H02		
220	E17 355 933	G	STRAINER	1/2	2	2					KP53F479H01		
221	E17 328 097	G	SPECIAL WASHER		4	4					KP02F652G01		

BLOWER PARTS (1)

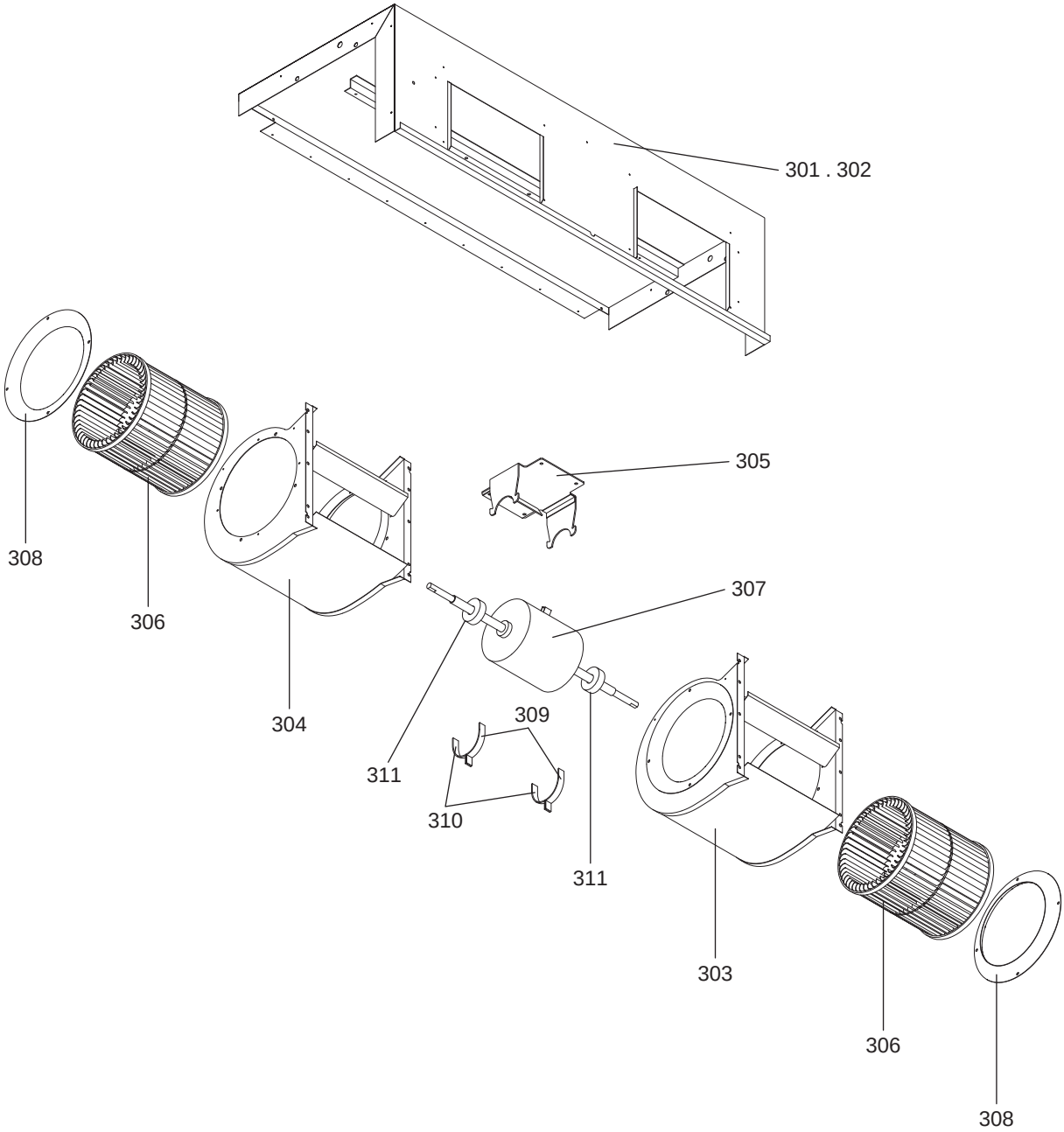

PEA-RP200GAQ.TH-AF
PEA-RP250GAQ.TH-AF

BLOWER PARTS (1)

No.	Part No.	G : RoHS Apply Only W : RoHS Apply by Running Change	Part Name	Spec.	PEA-RP200GAQ.TH-AF	PEA-RP250GAQ.TH-AF					Dwg. No.	Notes for the models	Revision info.
301	E17 330 297	G	PANEL (TOP) ASSY		1						KP00C587G11		
302	E17 331 297	G	PANEL (TOP) ASSY			1					KP00C587G12		
303	E17 328 237	G	FAN CASING ASSY		1	1					KP00C589G15		
304	E17 331 237	G	FAN CASING ASSY		1	1					KP00C589G16		
305	E17 330 128	G	MOTOR BASE ASSY 8.12		1	1					KP00R172G02		
306	E17 328 500	G	SIROCCO FAN		2	2					KP25B268G02		
307	E17 332 300	G	MOTOR ASSY	PE-12 KFS4S-773A8P-T	1	1					KP61D734G02		
308	R302D730G02	G	BELL MOUTH		2	2					R302D730G02		
309	R302F328G89	G	ATTACHMENT		2	2					R302F328G89		
310	R302F328G90	G	ATTACHMENT	With weld nut	2	2					R302F328G90		
311	E17 018 505	G	RUBBER MOUNT		2	2					R331F676H01		

BLOWER PARTS (2)

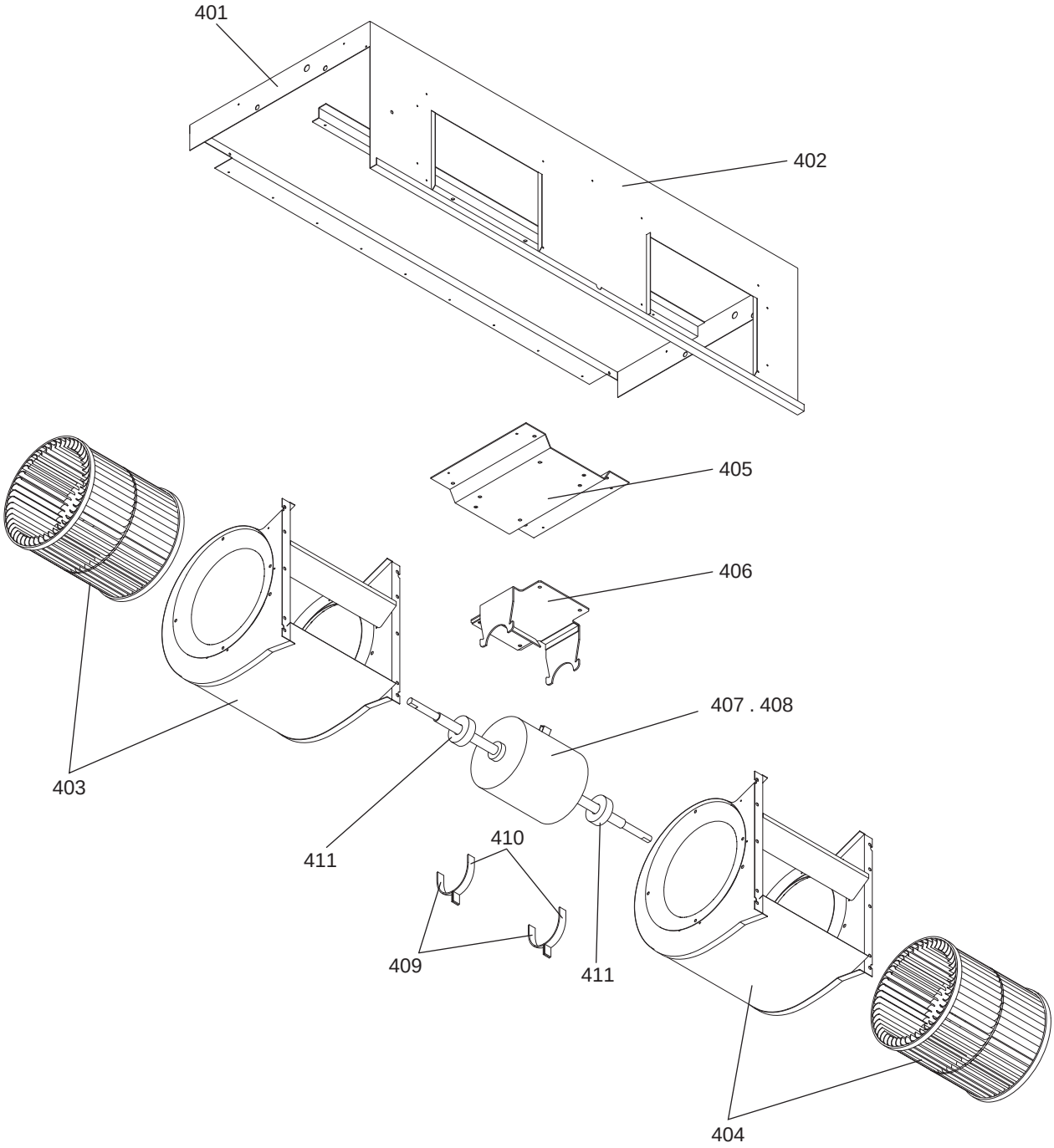

BLOWER PARTS (2)

No.	Part No.	G : RoHS Apply Only W : RoHS Apply by Running Change	Part Name	Spec.	PEA-RP400GAQ.TH-AF	PEA-RP500GAQ.TH-AF					Dwg. No.	Notes for the models	Revision info.
401	E17 333 297	G	PANEL (TOP) ASSY		1	1					KP00B269G05		
402	E17 333 232	G	PANEL F ASSY		1	1					KP00B272G03		
403	E17 333 237	G	FAN CASING ASSY R	With SIROCCO FAN	1	1					KP00C915G03		
404	E17 333 238	G	FAN CASING ASSY L	With SIROCCO FAN	1	1					KP00C915G04		
405	E17 333 128	G	BASE (MOTOR) ASSY		1	1					KP00D744G02		
406	E17 333 334	G	MOTOR LEG INS ASSY		1	1					KP00F181G03		
407	E17 333 300	G	MOTOR ASSY	PE(H)-16 YC1.3EA	1						KP61D751G01		
408	E17 334 300	G	MOTOR ASSY	PE(H)-20 YB1.8EC		1					KP61D751G02		
409	KP00F569G02	G	ATTACHMENT	With weld nut	2	2					KP00F569G02		
410	KP02F567G04	G	ATTACHMENT		2	2					KP02F567G04		
411	E17 333 505	G	RUBBER MOUNT		2	2					R331K339H02		

CONTROL BOX PARTS (1)

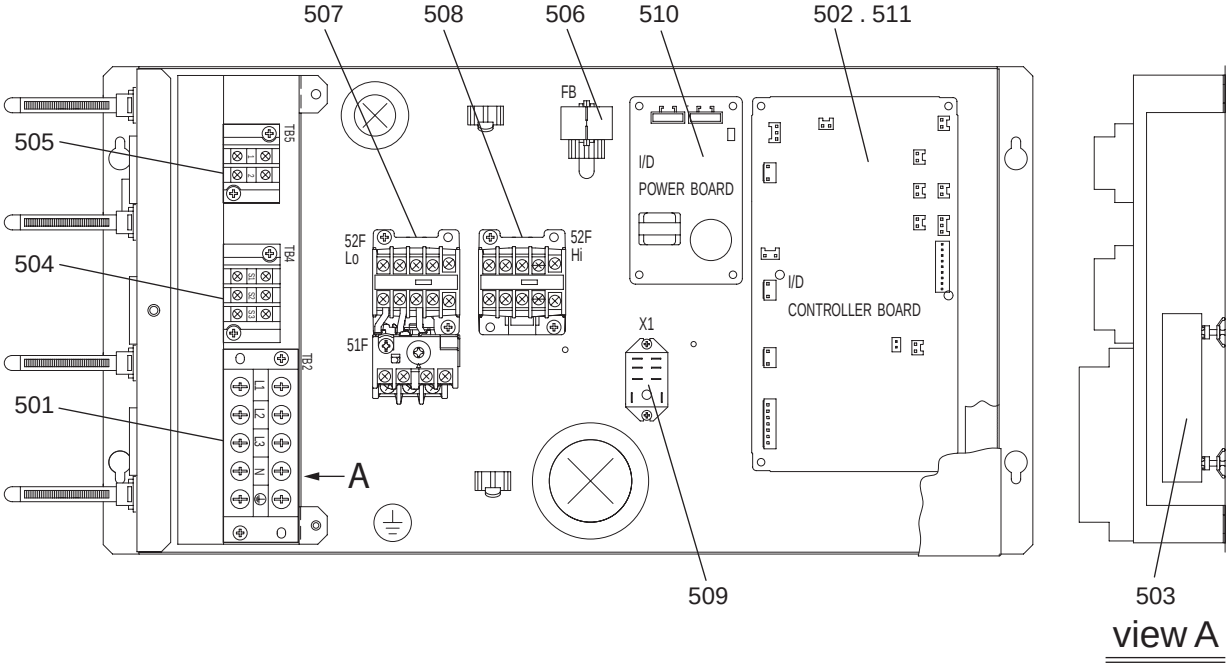

CONTROL BOX PARTS (1)

No.	Part No.	G : RoHS Apply Only W : RoHS Apply by Running Change	Part Name	Spec.	PEA-RP200GAQ.TH-AF	PEA-RP250GAQ.TH-AF					Dwg. No.	Notes for the models	Revision info.
501	E17 328 375	G	TERMINAL BLOCK	<TB2>	1	1					BC73L773G05		
502	E17 343 447	G	PCA	I/D CONTROLLER BOARD		1					BH00C668F11		
503	E17 328 384	G	PCA	SNB BOARD 1	1	1					KE95C232F01		
504	E17 370 374	G	TERMINAL BLOCK	3020 3P <TB4>	1	1					KP00F094G02		
505	E17 365 374	G	TERMINAL BLOCK	3020 2P <TB5>	1	1					KP00F094G04		
506	E17 328 394	G	CLAMP FERRITE	<FB>	1	1					KP65F165H01		
507	E17 330 340	G	MAGNETIC CONTACTOR	PAK-6JTH <52FLo,51F>	1	1					KP67C898H01		
508	E17 331 340	G	MAGNETIC CONTACTOR	PAK-6J <52FHi>	1	1					KP67C900H01		
509	E17 364 341	G	RELAY	LY2F <X1>	1	1					KP67F153H01		
510	E17 262 440	G	PCA	I/D POWER BOARD	1	1					RG00V959F02		
511	E17 357 447	G	PCA	I/D CONTROLLER BOARD	1						BH00C668F13		

CONTROL BOX PARTS (2)

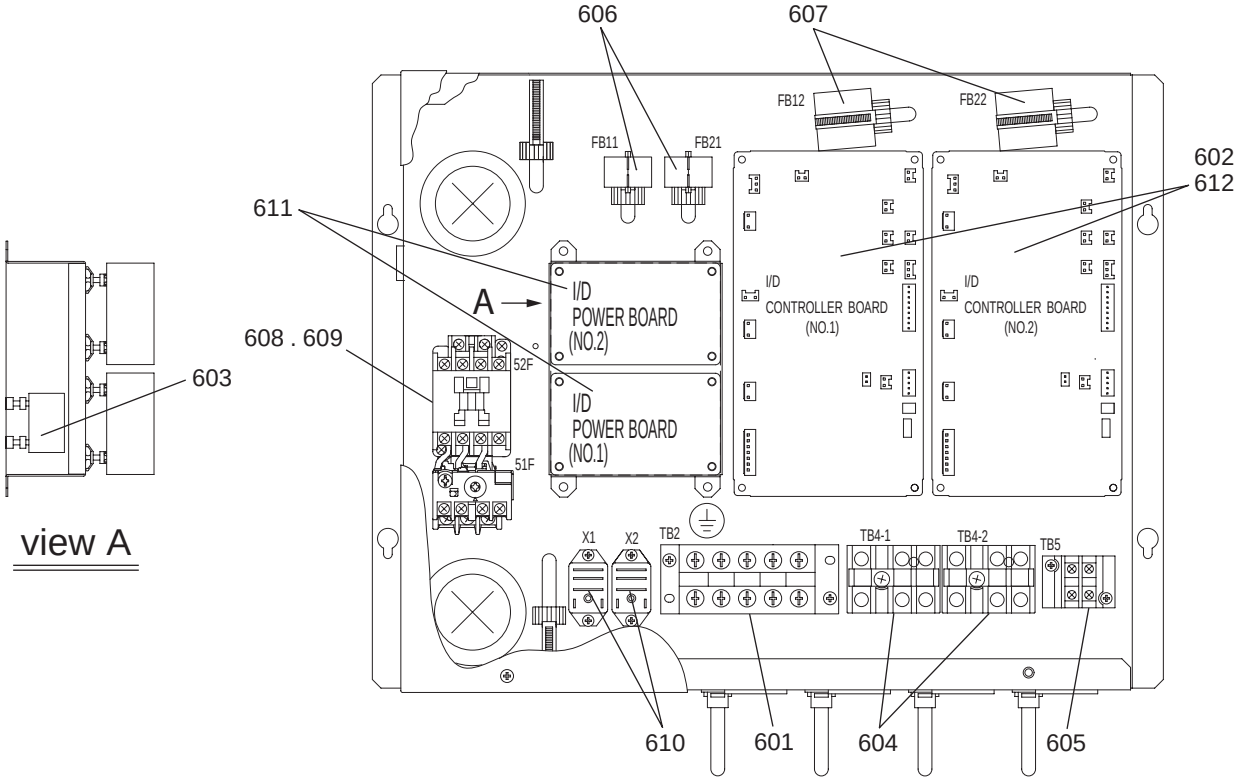

CONTROL BOX PARTS (2)

No.	Part No.	G : RoHS Apply Only W : RoHS Apply by Running Change	Part Name	Spec.	PEA-RP400GAQ.TH-AF	PEA-RP500GAQ.TH-AF					Dwg. No.	Notes for the models	Revision info.
601	E17 328 375	G	TERMINAL BLOCK	<TB2>	1	1					BC73L773G05		
602	E17 345 447	G	PCA	I/D CONTROLLER BOARD(NO.1,2)		2					BH00C668F12		
603	E17 328 384	G	PCA	SNB BOARD 1	1	1					KE95C232F01		
604	E17 370 374	G	TERMINAL BLOCK	3020 3P <TB4-1,TB4-2>	2	2					KP00F094G02		
605	E17 365 374	G	TERMINAL BLOCK	3020 2P <TB5>	1	1					KP00F094G04		
606	E17 328 394	G	CLAMP FERRITE	<FB11,FB21>	2	2					KP65F165H01		
607	E17 333 394	G	CLAMP FERRITE	ESD-SR <FB12,FB22>	2	2					KP65F183H01		
608	E17 334 340	G	MAGNETIC CONTACTOR	PAK-11JTHC <52F,51F>		1					KP67C898H04		
609	E17 333 340	G	MAGNETIC CONTACTOR	PAK-11JTHC <52F,51F>	1						KP67C898H05		
610	E17 364 341	G	RELAY	LY2F <X1Lo,X2Hi>	2	2					KP67F153H01		
611	E17 262 440	G	PCA	I/D POWER BOARD(NO.1,2)	2	2					RG00V959F02		
612	E17 359 447	G	PCA	I/D CONTROLLER BOARD(NO.1,2)	2						BH00C668F14		

MITSUBISHI ELECTRIC CORPORATION
HEAD OFFICE: TOKYO BLDG., 2-7-3, MARUNOUCHI, CHIYODA-KU, TOKYO 100-8310, JAPAN

BWE10140 (20101031)